An ISO9001 Quality-Certified Enterprise

A Well-Known Brand and Professionally Manufactured

Professional manufactory of Instruments and Valves,Electric Actuators

Operation Manual

The series of Pneumatic Control Valve

Mini-type Pneumatic Diaphragm Single Seat Control Valve

1. Summary

mini-type pneumatic single seat control valve is made up of pneumatic multi spring diaphragm actuator and mini-type single seat valve.

Multi spring actuator is small in structure, light in weight and simple. The mini type valve body has compact structure, unobstructed flow channel and large flow coefficient.

2. Technical Parameters and Performance

Body

Type	Direct-through single seat control valve
Nominal Diameter	20、25、32、40、50、65、80、100、125、150、200mm
Nominal Pressure	PN1.6、4.0、6.4Mpa
Flange Standard	JB/T79.1-94、79.2-94, etc.
Material	Cast steel(ZG230-450)、cast stainless steel(ZG1Cr18Ni9Ti、ZG1Cr18Ni12Mo2Ti), etc.
Bonnet	Standard -17~+230℃、thermal fin type +230~+450℃、low temperature -60~ -196℃、bellowssealbonnet -40~ +350℃
Gland Type	Bolt hold down cap
Padding	V-type PTFE、containing PTFE asbestos packing、textile asbestos packing、graphite packing
Construction	See Picture1-5

Inside groupware

Plug Type	Single seat plunger valve plug
Flow Characteristic	Equal percentage or linear
Material	Stainless steel(1Cr18Ni9Ti、1Cr18Ni12Mo2Ti、17-4PH、9Cr18、316L)、titanium、corrosion-resisting alloy, etc.

Actuator

Type	multi spring diaphragm actuator				
Model	/B-22	/B-23	/B-34	/B-45	/B-56
Effective Area cm²	350	350	560	900	1400
Stroke mm	10、16	25	40	40、60	100
Spring Range Kpa	20~100(standard)、20~60、60~100、40~200、80~240				
Diaphragm Material	NBR with nylon fabric、EPR with nylon fabric				
Air Supply Pressure	140~400KPa				
Air Connection	RC1/4”				
Ambient Temperature	-30~+70℃				

Mode of action

Air off type (B)-----air lose, valve open(FO); air on type (K)----air lose, valve close (FC)

Accessories

Positioner、air filter& reductor、lock up valve、travel switch、valve position transmitter、handwheel, etc.

Performance

Item			No Positioner	With Positioner
Basic Error %			±5.0	±1.0
Return Difference %			≦3.0	≦1.0
Dead Zone %			≦3.0	≦0.4
Deviation between start and end point %	Air on	Start point	±2.5	±1.0
		End point	±5.0	±1.0
	Air off	Start point	±5.0	±1.0
		End point	±2.5	±1.0
Rated stroke deviation %			≦2.5	
Leak amount l/h			0.01%*valve rated volume	
Adjustable range R			30: 1	

Rated Kv、rated stroke、actuator model

Nominal Diameter (mm)		20				25	32	40	50	65	80	100	125	150	200
Seat Diameter (mm)		10	12	15	20	25	32	40	50	65	80	100	125	150	200
Rated flow coefficient Kv	linear	1.8	2.8	4.4	6.9	11	17.6	27.5	44	69	110	176	275	440	690
	Equal percentage	1.6	2.5	4.0	6.3	10.	16	25	40	63	100	160	250	400	630
Rated stroke L (mm)		10				16	25			40			60		
Actuator model		ZHA/B-22				ZHA/B-23				ZHA/B-34			ZHA/B-45		

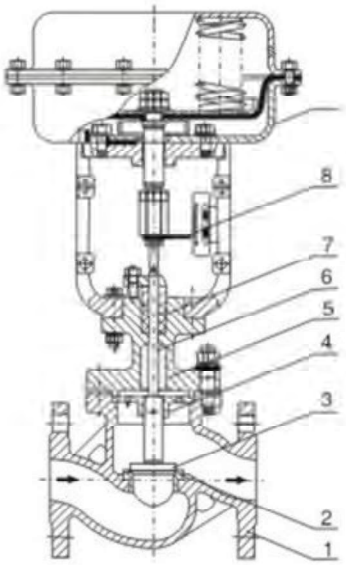

1.body
2.seat
3.valve plug
4.guide sleeve
5.bonnet
6.stem
7.padding
8.scale indication
9.actuator

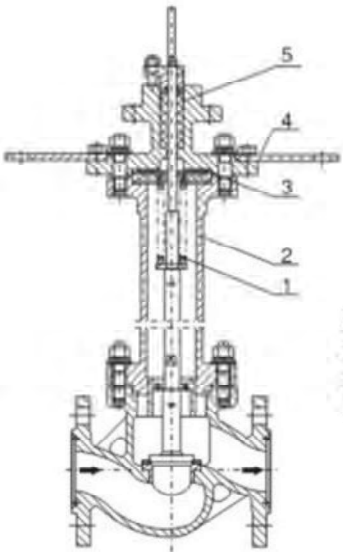

1.bellows
2.adapter tube
3.bonnet
4.cold box junction plate

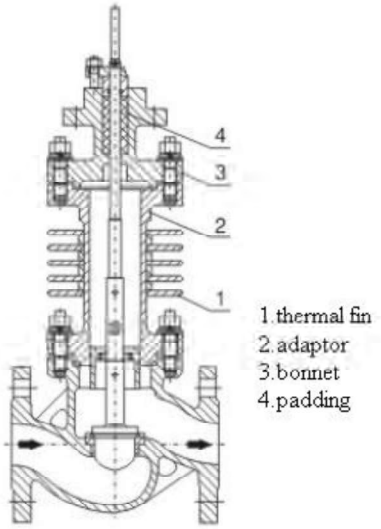

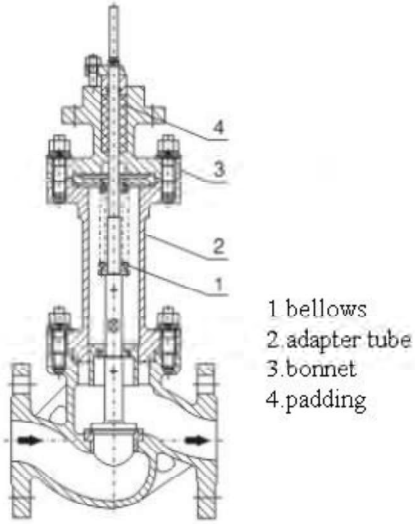

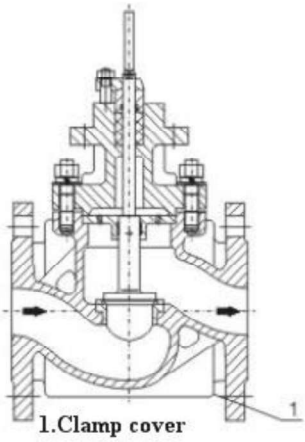

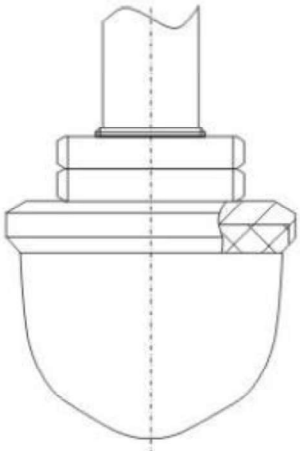

Allowable pressure differential

Nominal Diameter (mm)			20				25	32	40	50	65	80	100	125	150	200
Seat Diameter (mm)			10	12	15	20	25	32	40	50	65	80	100	125	150	200
Actuator			/B-22					/B-23			/B-34			/B-45		
Model of Action	Air supply pressure (Kpa)	Spring range (Kpa)	Allowable pressure differential (MPa)													
Air off	140	20~100	6.4	6.19	3.96	2.23	2.14	0.87	0.56	0.35	0.34	0.22	0.14	0.15	0.1	0.06
	250	20~100	6.4	6.4	6.4	6.4	6.4	5.68	3.64	2.3	2.21	1.43	0.91	0.95	0.66	0.37
	400	40~200	6.4	6.4	6.4	6.4	6.4	6.4	5.04	3.18	3.06	1.98	1.26	1.32	0.92	0.52
Air on	140	20~100	4.46	3.09	1.98	1.16	0.7	0.44	0.28	0.18	0.17	0.11	0.07	0.07	0.05	0.03
	250	40~200	6.4	6.4	5.94	3.34	2.14	1.31	0.84	0.53	0.51	0.33	0.21	0.22	0.15	0.09
	400	80~240	6.4	6.4	6.4	6.4	4.99	3.05	1.95	1.25	1.18	0.78	0.5	0.51	0.36	0.21

Shape size and weight

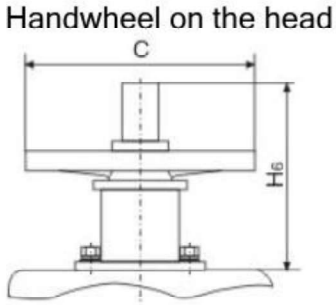

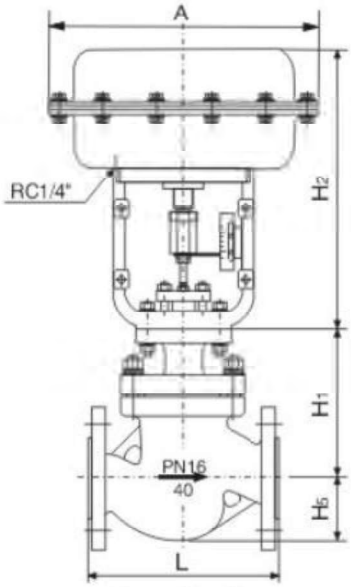

Standard type

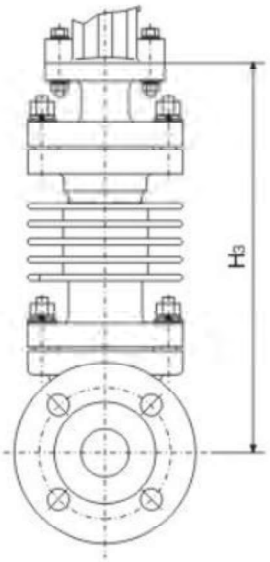

Thermal fin type

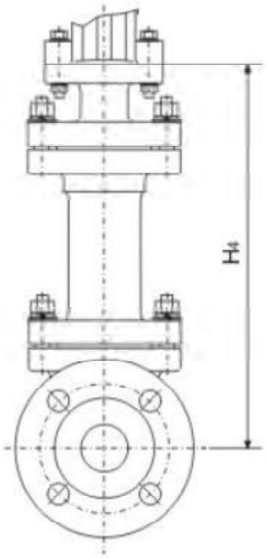

Bellows seal type

Unit:mm

Nominal Diameter		20	25	32	40	50	65	80	100	125	150	200
L	PN16/40	181	184	220	22	254	276	298	352	410	451	600
	PN64	206	210	251	251	286	311	337	394	457	508	650
A		285	285	285	285	285	360	360	360	470	470	470
H1	PN16/40	128	128	152	152	160	205	205	208	273	330	364
	PN64	140	140	160	160	180	210	210	220	290	340	370
H2		298	298	298	298	298	380	380	380	510	510	510
H3	PN16/40	208	208	224	228	228	334	334	342	408	453	482
	PN64	220	220	240	240	240	350	350	360	420	470	500
H4		238	338	402	402	405	627	628	635	698	702	728
H5	PN16/40	53	58	68	73	80	90	98	108	123	140	168
	PN64	63	68	75	83	88	100	105	125	148	170	203
C		220	220	220	220	220	270	270	270	320	320	320
H6		180	180	180	180	180	236	236	236	310	310	310
Weight (kg)	PN16/40	21	22	24	32	38	62	67	83	132	160	245
	PN64	24	25	30	42	52	78	82	102	170	190	285

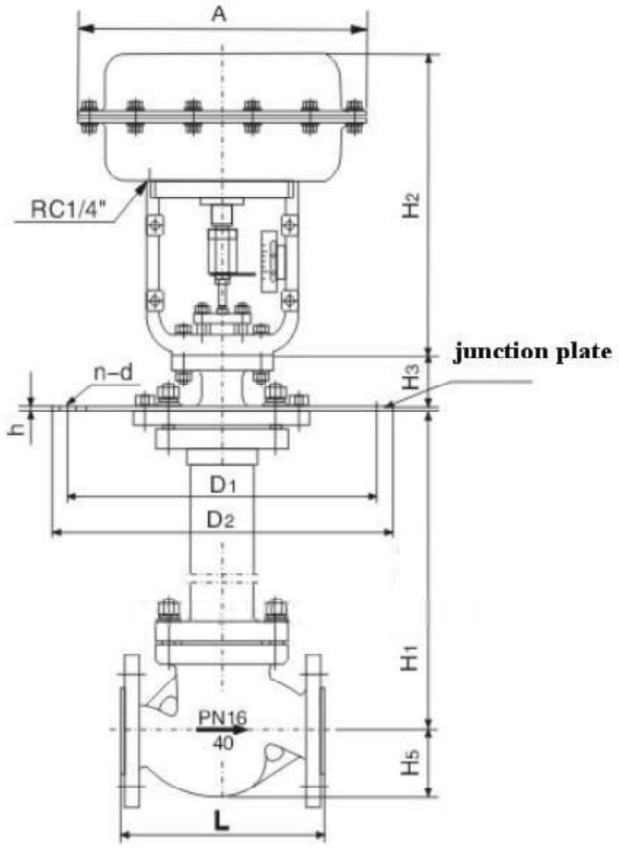

Handwheel on head

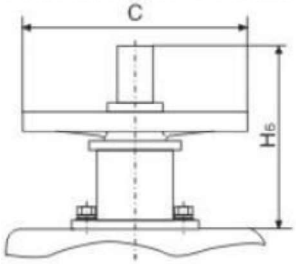

Metal O-ring size
(PN16/40)

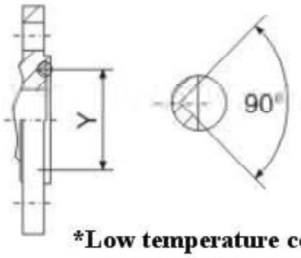

***Low temperature control valve flange adopt metal O-ring(LF2) seal. It also can use aluminum ring.**

Unit:mm

Nominal Diameter		20	25	32	40	50	65	80	100	125	150	200
L	PN16/40	181	184	220	222	254	276	298	352	410	451	600
	PN64	206	210	251	251	286	311	337	394	457	508	650
A		285	285	285	285	285	360	360	360	470	470	470
H1		700	700	700	700	700	700	700	700	700	700	700
H2		298	298	298	298	298	380	380	380	510	510	510
H3		88	88	88	88	88	94	94	94	110	110	110
H5	PN16/40	53	58	68	73	80	90	98	108	123	140	168
	PN64	63	68	75	83	88	100	105	125	148	170	203
D1	PN16/40	230	230	250	270	305	342	375	430	490	556	665
	PN64	270	270	305	342	375	430	490	556	665	665	765
D2	PN16/40	310	310	335	335	390	430	465	520	585	660	770
	PN64	355	355	390	430	465	520	585	660	770	770	890
h		15	15	15	15	15	15	15	15	15	15	15
N-d	PN16/40	8-12	8-12	8-12	8-14	8-14	10-14	10-14	12-16	14-16	16-16	18-16
	PN64	8-14	8-14	8-14	10-14	10-14	12-16	14-16	16-16	18-16	18-16	18-16
Y		45	45	60	65	75	90	104	135	165	195	245
C		220	220	220	220	220	270	270	270	320	320	320
H6		180	180	180	180	180	236	236	236	310	310	310
Weight (kg)		40	48	52	60	68	90	105	143	210	282	315

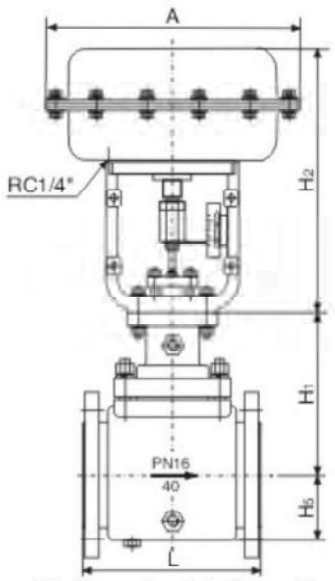

Heating medium interface can be made as per customers' idea, as the form of flange, cutting sleeve, and thread.

Clamp cover thermal insulation type

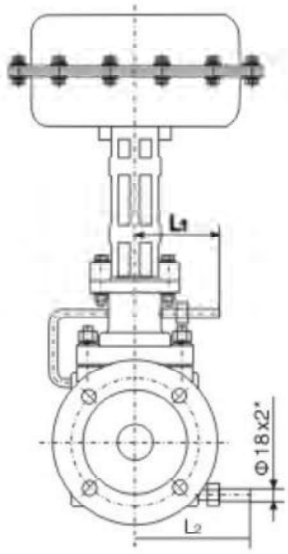

Bellows seal clamp cover thermal insulation type

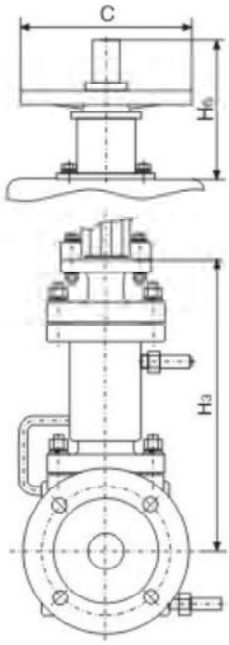

Nominal Diameter	20	25	32	40	50	65	80	100	125	150	200
L	181	184	220	222	254	276	298	352	410	451	600
A	285	285	285	285	285	360	360	360	470	470	470
H1	152	152	177	177	183	221	221	230	315	355	385
H2	298	298	298	298	298	380	380	380	510	510	510
H3	220	220	240	240	240	350	350	360	420	470	500
H5	75	81	89	95	109	121	133	146	160	180	210
L1	101	101	108	108	108	123	123	123	140	140	140
L2	126	126	126	130	141	156	170	180	200	220	265
C	220	220	220	220	220	270	270	270	320	320	320
H6	180	180	180	180	180	236	236	236	310	310	310
Flange spec. DN	40	40	50	65	80	100	125	150	200	250	300
Weight (kg)	26	27	35	44	56	84	88	109	185	202	305

Type Explanation

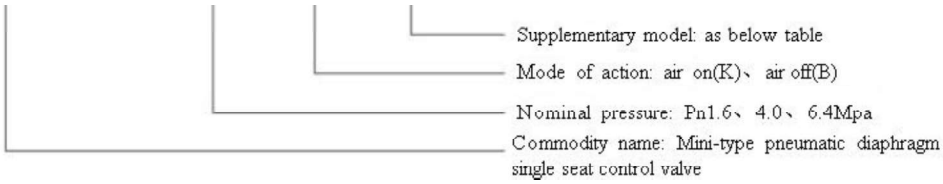

Type	Standard	Low temperature	Thermal dissipation	Bellows	Clamp cover thermal insulation	Adjust and cutoff	Fluorine-lined
Code		D	G	W	J	Q	F