Insertion Density Meter

- The measurements of the insertion density meters will NOT be affected by the density, tempreature, pressure, viscosity.
- The standard accuracy of the insertion density meters is guaranteed to reach ±0.2%. And for the highest we could reach ±0.1%.
- The accuracy of ±0.2% is the accuracy under any circustances. And the compensation calculation is not required.

Coriolis Mass Flow Meter

- Measure Minuscule flow rate of 1kg/h
- We can measure any Gas including hydrogen gas
- Our superior formula of production of pipeline with very stable zero point

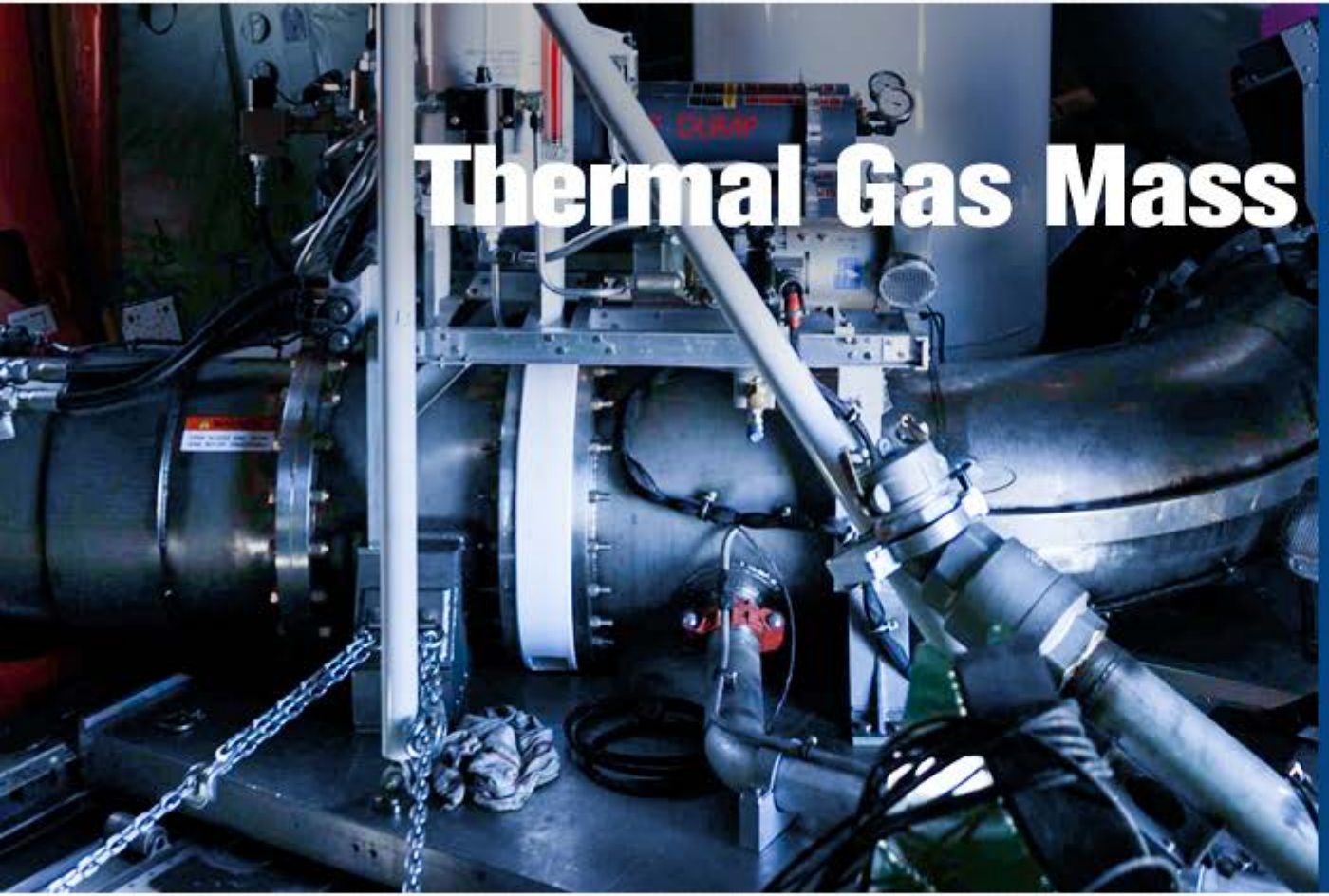

Thermal Gas Mass Flow Meter

- One solid piece with non movable parts
- Durability that you can count on
- High accuracy that you can trust of 1.0%

SRS INTERNATIONAL DIRECT

Connections

Standard RS 485/4-20mA/0-10KHz/HART

Circuit board

High precision DSP transmitter

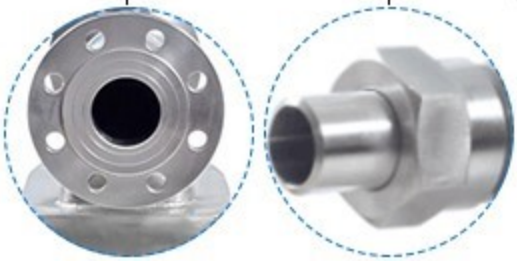

Measuring pipeline material

SS316L/HC276/titanium alloy, etc.

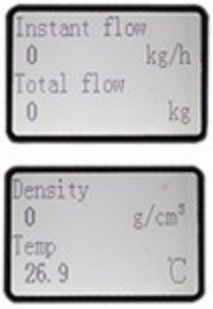

Touch screen

Cumulative flow rate + Instantaneous flow rate + temperature + density

Easy to remove

ANSI Flanges/ threaded connection, etc.
Flange customized

We support OEM Lable

Waterproof & Explosion-proof Threading hole

Principle of Measurement

Mass Flow is the integral and remote type Coriolis Mass Flowmeter. Both types have highly refined digital signal processing electronics, so that accurate and stable mass flow measurement is achieved.

Mass Flow employs a flame-proof type converter case suitable for use in the hazardous area together with it's intrinsically safety type detector.

Mass Flow signal processing, housing protection and its detector's special decoupling system against external loads and vibrations, realize high perfeormance in real applications.

Mass Flow Measurement according to the Coriolis principle. Almost all flowing materials including multi phase fluids, high viscosity liquids (pastes and slurries) and liquid with a certain content of gas. For difficult fluids (e.g. abrasive or highly corrosive fluids) and gases

WARNING

- Please read the instuction manual in details before using the instrument
- With the correct usage, the mass flow meters will perform perfectly according to the customers' needs.
- Inapropriate installation and operations under dangerous environment can cause dangers.

For the technical parameters under the dangerous situations, please refer to the explosion-proof section.

High Accuracy | Wide Range | High Sensitivity | High Stability

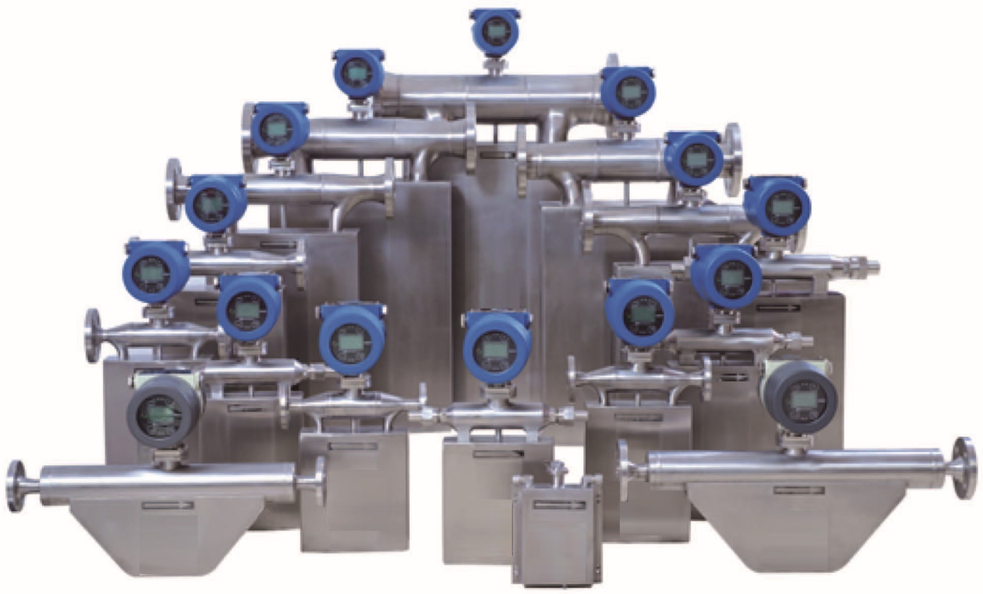

Technical Parameters

Field transmitter type mass flowmeter for nearly all fluids, including high viscosity liquids, slurries and multi phase media

Refined digital signal processing enables accurate and stable measurement

Simple flow path means self-draining, food capable and simple to clean

Choice of tube materials: Stainless Steel 316L, Hastelloy C, etc

Pressure: standard 2.5MPa 4MPa, customer specified pressure can be ordered, 100MPa maximum

Wide temperature range -200℃ to 350℃

Accurate flow measurement, up to +/- 0.1%

Ambient temperature range：-41~ 80℃

Accurate density measurement, up to +/- 0.001g/cm3

Repeatability：≤±0.05%

Power supply：24VDC 220VAC universal power supply, no polarity distinguish

Output：4~20mA 0~10KHz pulse output

Standard RS 485 Communication Protocol, HART Communication function

Available in explosion proof：Ex d ib II C T5 Gb

High visibility LCD display

ANSI, GB or Jis flanges as standard, others on request

Product Features

01 Dual Symmetric Differential Structure

02 High Sensitivity High range ratio

03 Non-linear Vibration Suppression Technology

04 Smooth Flow designed for Anti-interference

05 Classic U-shape tube designed for High Sensitivity

06 All touch screen operation. The inner technical parameters can be modified by the touch screen

07 Engineer's password and the operator's password makes easy modification of the instrument

08 Power Supply: 220VAC, 24VDC optional，with no distinguish of power terminal polarity

09 The latest V- shape design, with high stability, and the pressure loss is low

10 Full digital closed-up controlling function and DSP digital processing circuit, realized the high stability and high two -phase flow measurement accuracy

11 Balance matching technology of the dynamic vibration improves the system stability.

12 Accurate controlling. Specialized for the loading and unloading batch controlling occasions.

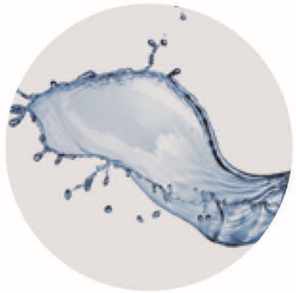

Applications

Technical Indicators and Performance Parameters

Technical Data

Liquid

Liquid Mass Flow / Volume Flow

Accuracy：±0.1% ±0.15% ±0.20%

Repeatability：≤±0.05%

Gas

Accuracy：±0.2% ±0.5%

Repeatability：≤±0.25%

Density Performance Indicators

Liquid Resolution：±0.0005 g/cm^3 (0.5 kg/m^3)

Repeatability：±0.0002 g/cm^3 (0.2 kg/m^3)

Measurement Accuracy：±0.002 g/cm^3 (2 kg/m^3)

Temperature Performance Indicators

Error：±0.5℃

Repeatability：±0.05℃

Temperature Measurement Range

Zero Stability

Flow Rate × Measurement Uncertainty（e.g 0.1%）≥Zero Stability

Maximum Measurement Error（%）：Measurement Uncertainty

Repeatability：±1/2× Measurement Uncertainty

Flow Rate × Measurement Uncertainty（e.g 0.1%）≤Zero Stability

Maximum Measurement Error（%）：± Zero Stability / Measured Value ×100%

Repeatability：±1/2 Zero Stability/ Measured Value ×100%

Process Temperature Effect

Medium temperature -200 ~ 150℃; -50 ~ 150℃; -50 ~ 250℃; -50 ~ 350℃

Storage temperature -50 ~ 70℃

Factory Calibration Conditions

Performance indicators are based on the working conditions (Normal 20-30℃，Pressure 0.2-0.4MPa), measured medium: water

Calibration and Operations

System menu password

Current system menu contains system set numbers, it is not recommended to be altered with. if needed, please contact customer service ,and we shall direct you.

Operator Menu

The password for the operator is “20”

Within this password，the functions of “Checking Records”，“Setting Modification”，“Output Test”，“Error Clearance” can be accomplished. Within the interface of “Setting Modification”, the functions of “Total Data Clearance”，“Zero Adjustment”，“Unit Selection”，“Decimal Digits”，“Respond Time”，“Current Output”，“Tiny Signal Cut” can be modified.

Measuring unit selection

The flow range modification is automatically accomplished by the software after selecting the displayed units.

t/h kg/h g/h t/min kg/min g/min kg/s g/s m3/h L/h ml/h m^3/min L/min ml/min L/s ml/s

lb/h oz/h lb/min oz/min lb/s oz/s

gal/h gal/min gal/s

Decimal Digits：0~3 decimal digits can be selected.

Current Output

Instant flow/ density output optional

Frequency Output

instant flow rate（0~10KHz）or pulse（g/Hz、ml/Hz）output optional

Planning and Installation Hints

- The working principle of the coriolis mass flow meters is vibration. So the it is recommended to install the mass flow meters where has less vibrations. And the solid support for the installation pipelines is required. If the vibration source could not be ignored, then it is recommended to use the hose connection.
- The connection pipelines and the mass flow meters' interface should be installed in the same axis. Do not impose an additional force on the instrument. Unnecessary additional force will affect the measurement accuracy of the instrument.
- Please stay away from the heating source for the installation locations to prevent overheating of the transmitters.
- If the throttle device is required, such as the flow control valves, etc. Then it must be installed in the outlet of the mass flow meters.
- Zero Point can be adjusted by setting the switches on display or with status input when the fluid is stopped and the detector filled. To ensure no flow conditions isolation valves should be installed in the outlet of the mass flow meters.
- The flow meters should be keep a certain distance away from the outlet of the pumps, especially the reciprocating pumps. If the installations getting too close to the valves may cause the measurement value fluctuations.
- Risk of electronics overheating! Make sure that the maximum permissible ambient temperature for the transmitter is not exceeded. Consequently, make sure that the adapter between the sensor and transmitter and the connection housing of the remote version always remain free of insulating material. Special heating jackets which can be ordered as accessories from Beijing Sincerity are available for the sensors.
- The measured medium should be in the right flow state. If the flow status of the fluid is not suitable under the natural environment conditions, then the external improvements should be adopted. The temperature of the fluid can be taken to regulate, eg. Heating/ Cooling, heat preservation, etc.
- Make sure that the direction of the arrow on the nameplate of the sensor matches the direction of flow direction in which the fluid flows through the pipe.
- The serial number of the sensor and the transmitters has to be one to one corresponded. And it must not be replaced randomly. Otherwise the error may occur.

Accuracy Graph

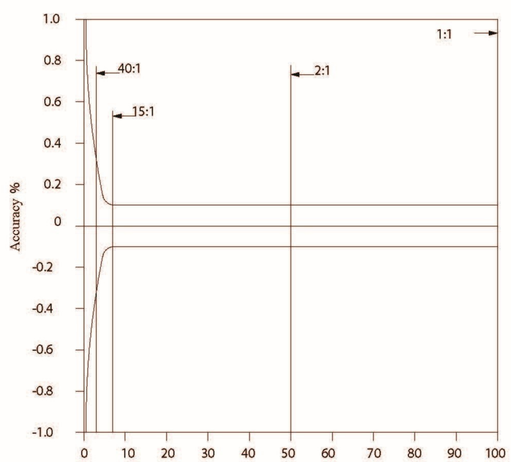

Instant Flow Rate %Instrument Flow Range
Instantaneous Flow standard precision curve

Protocol settings and Signal Address

Factory Parameters

Modbus RTU basic Setups
Baud Rate：9600
Digital Check：None
Data Bits：8
Stop Bit：1
All datas are floating point numbers
Customer secified settings are available

Signal Address

By inuputting "1.0" into area 41049 will result in total data clearance. After clearance the signal address will go back to "0.0".

All the other addresses that are not opened are belong to the inner parameters of the instrument. If it is required to be changed,

Series Mass Flow Meter

S/N	Holding Register	Address(Hexadecimal/Decimal)	Definition
1	41001	0x03E8 / 1000	Mass Flow
2	41003	0x03EA / 1002	Volume Flow
3	41005	0x03EC / 1004	Total Mass Flow
4	41007	0x03EE / 1006	Total Volume Flow
5	41009	0x03F0 / 1008	Density
6	41011	0x03F2 / 1010	Temperature
7	41049	0x0418 / 1048	Total Data Clearance

Dimensions

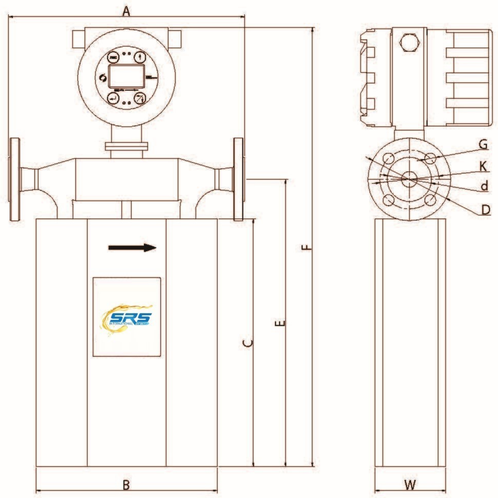

Large-Scale Flow Meters

Unit:mm

Model	Weld Neck Flanges-ANSI B16.5		A	B	C	E	F	W	G	K	d	D
	DN	lb										
	100	150	670	510	740	858	1092	260	19.1	190.5	157.2	228.6
	125	150	670	510	740	858	1092	260	22.4	215.9	185.7	254
	150	150	860	670	950	1130	1370	280	22.4	241.3	215.9	279.4

Medium-Scale Flow Meters

Unit:mm

Model	Flange (GB / T 9112-9124-2000)		A	B	C	E	F	W	G	K	d	D
	DN	PN(MPa)										
	10	4.0	280	210	235	285	485	80	14	60	41	90

Model	Weld Neck Flanges-ANSI B16.5		A	B	C	E	F	W	G	K	d	D
	DN	lb										
	15	300	280	210	275	325	525	80	15.7	66.55	35	95.2
	20	300	290	230	325	375	575	90	19	82.5	42.9	117.3
	25	300	410	300	440	500	696	120	19	88.9	50.8	123.9
	40	300	520	360	480	585	790	130	22.3	114.3	73.15	155.4
	50	150	550	370	548	670	875	153	19.1	120.7	91.9	152.4
	65	150	560	440	600	715	936	200	19.1	139.7	104.6	177.8
	80	150	600	470	650	767	988	220	19.1	152.4	127	190.5

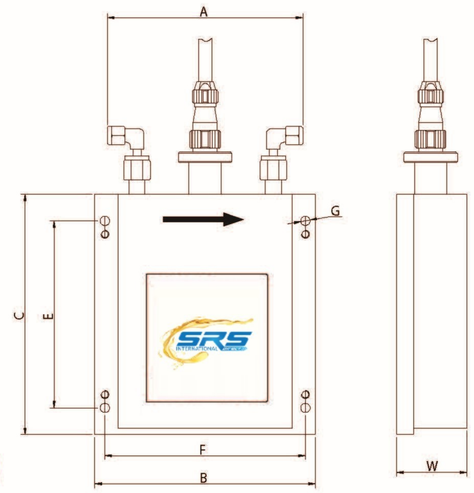

Micro Flow Meters

Unit:mm

Model	Pipeline Size	PN(MPa)	A	B	C	E	F	W	G
	6	25	160	165	180	140	150	53	7
	8	25	160	165	180	140	150	53	7
	8	25	175	208	245	185	188	53	7

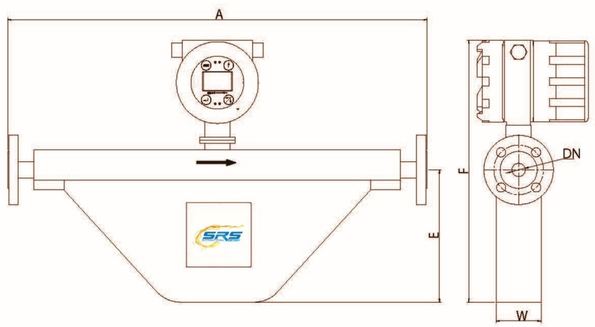

Series Mass Flow Meters

Unit:mm

Model	DN	A	E	W	F
	10	550	160	68	360
	15	580	170	68	370
	20	640	200	68	400
	25	780	320	100	520
	50	900	230	108	460
	80	995	260	140	515
	100	1300	350	150	605
	150	1750	490	262	805
	250	1920	510	262	825

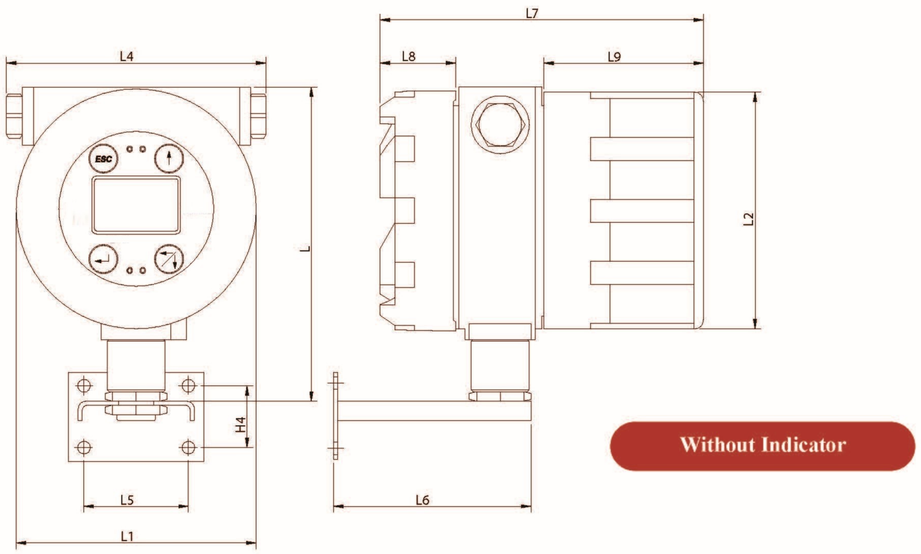

Without Indicator

Unit:mm

	L	L1	L2	L4	L5	L6	L7	L8	L9	H4
Transmitter	156	125	118	130	54	102	180	45.5	85	32

Signal Output

Power Supply

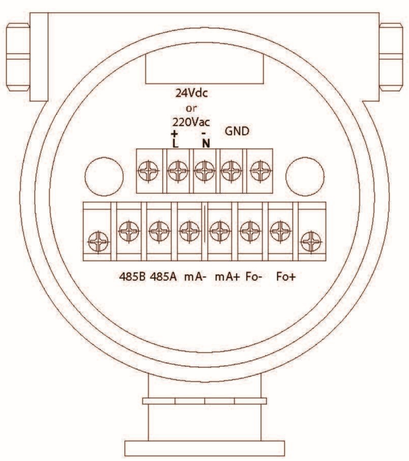

Installation

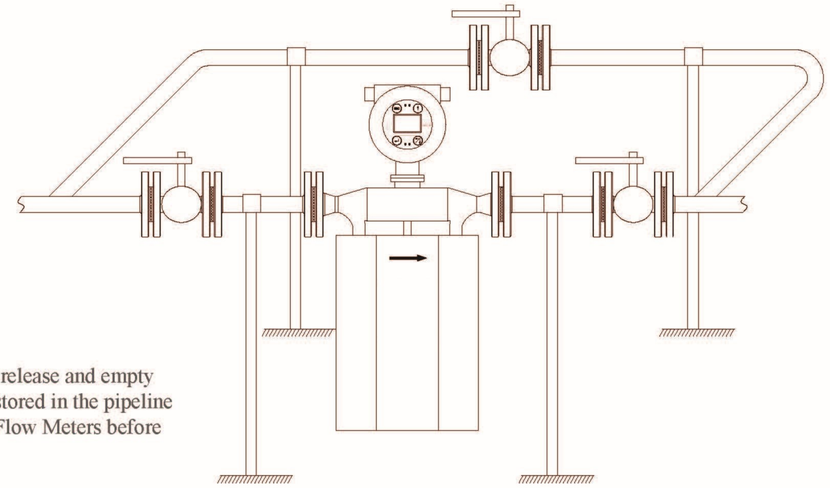

It is recommended to release and empty the gas that possibly stored in the pipeline of the Coriolis Mass Flow Meters before installation.

Horizontal Orientation, Transmitter head up

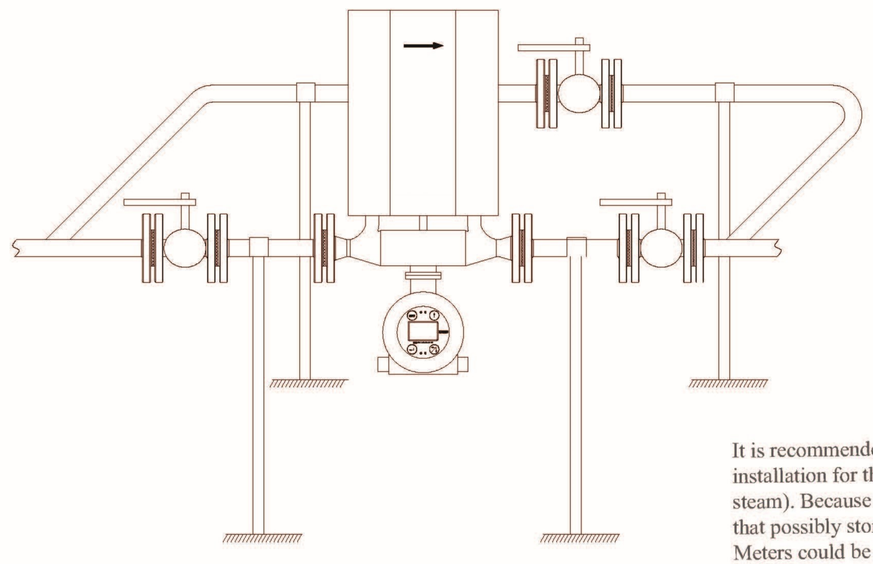

It is recommended to use the inverted installation for the measurement of Gas (e.g. steam). Because only in this way, the liquid that possibly stored in the Coriolis Mass Flow Meters could be released and emptied.

Horizontal Orientation, Transmitter head down

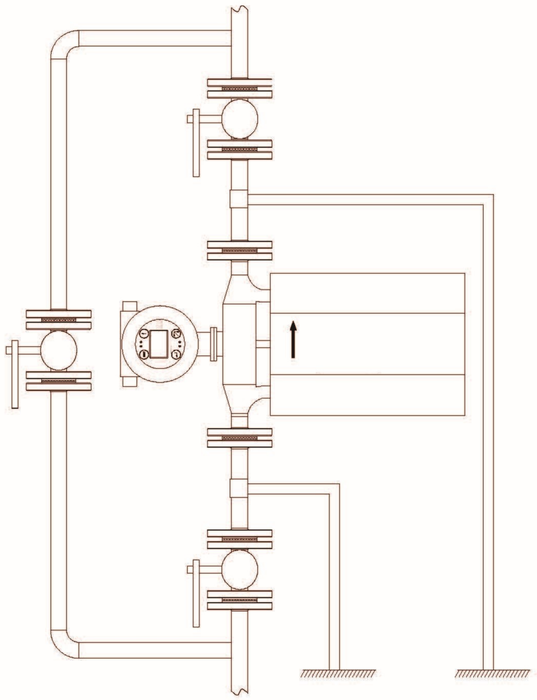

Recommended orientation with upward direction of flow. When fluid is not flowing, entrained solids will sink down and gases will rise away from the measuring tube. The measuring tubes can be completely drained and protected against solids buildup.

Vertical Orientation

The proposed configuration in the following diagram, however, permits installation in a vertical pipeline. Pipe restrictors or the use of an orifice plate with a smaller cross-section than the nominal diameter prevent the sensor from running empty during measurement.

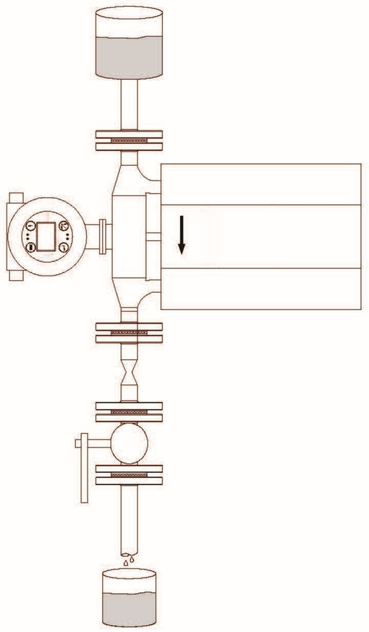

Vertical Orientation

MODEL-, SUFFIX- AND OPTION-CODES

Model	Description											
SRS-DMF-	Suffix Code	Process connection size/Measuring range										
	1A	DN3, 0-40kg/h										
	1B	DN6, 0-100kg/h										
	2A	DN8, 0-200kg/h										
	3A	DN10, 0-500kg/h										
	3B	DN15, 0-1000kg/h										
	4	DN20, 0-3000kg/h										
	5A	DN25, 0-10t/h										
	5B	DN40, 0-20t/h										
	6A	DN50, 0-30t/h										
	6AB	DN65, 0-50t/h										
	6B	DN80, 0-100t/h										
	6C	DN100, 0-150t/h										
	6CD	DN125, 0-200t/h										
	6D	DN150, 0-500t/h										
	6E	DN200, 0-800t/h										
	6F	DN250, 0-1000t/h										
		Code	Output									
		A	4-20mA（Instant flow rate/density）0-10KHz（Instant flow pulse output, RS485 Modbus RTU,HART									
			Code	Sensor Housing								
			B	Diecasted aluminum alloy housing Wiring Hold Size：M20×1.5								
				Code	Pressure							
				16	1.6MPa							
				40	4.0MPa							
				XX	With customer specified pressure							
					Code	Temperature						
					A	-50~150°C						
					B	-50~250°C						
					C	-50~350°C						
					D	-200~150°C						
						Code	Accuracy					
						N	0.20%					
						M	0.15%					
						H	0.10%					
							Code	Process Connection				
							F	Flange GB/T 9123.1-2000 ANSI Weld Neck Flanges-ANSI B16.5				
							W	Ferrule type				
							L	threaded connection				
							T	With customer specified flange				
								Code	Testing Certificate			
								F	Factory，Factory certificate			
								I	GB，Third party certificate			
									Code	Material of wetted parts		
									A	Stainless Steel 316L		
									C	Hastelloy C		
									F	Inner Wall Surface with PTFE spray（large size only）		
									T	Special Order: With customer specified material		
										Code	Transmitter	
										A	Integrative Installation	
										B(XX)	Seperate Installation（connector length）, with holder	
											Code	Explosion Prrof
											A	Ex d ib II C T5 Gb
	3B(0~800kg/h)	A	B	40	A	N	F	F	A	B(10)	A	Special order information

01 LIQUIDS

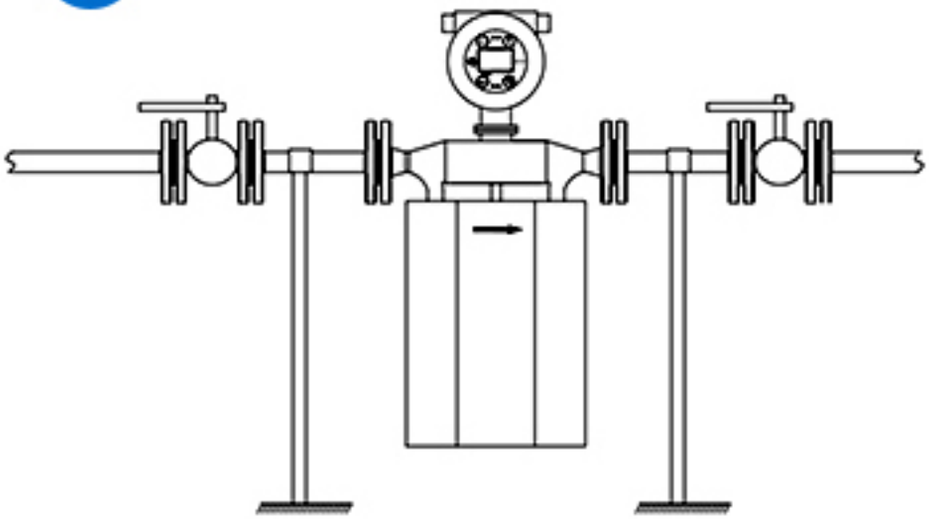

02 GASES

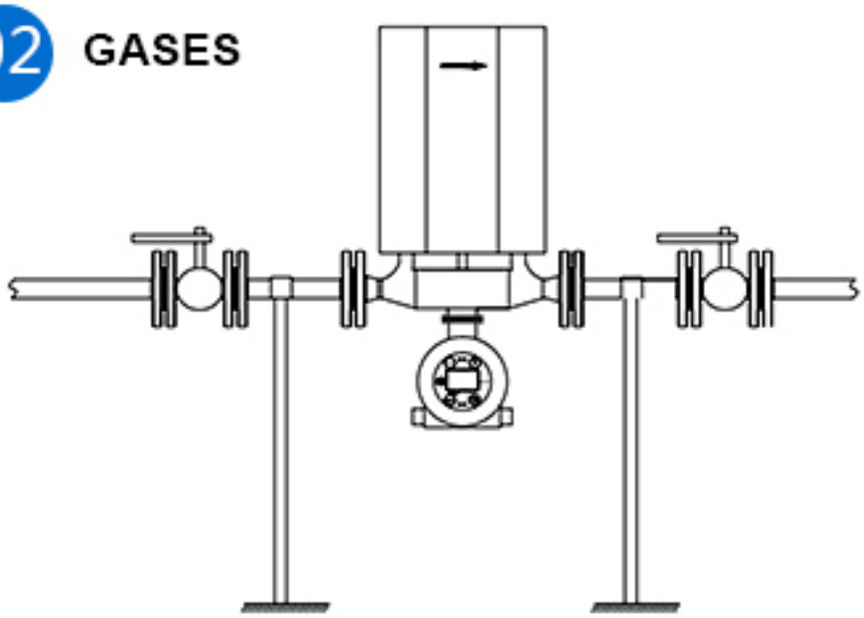

03 SLURRIES

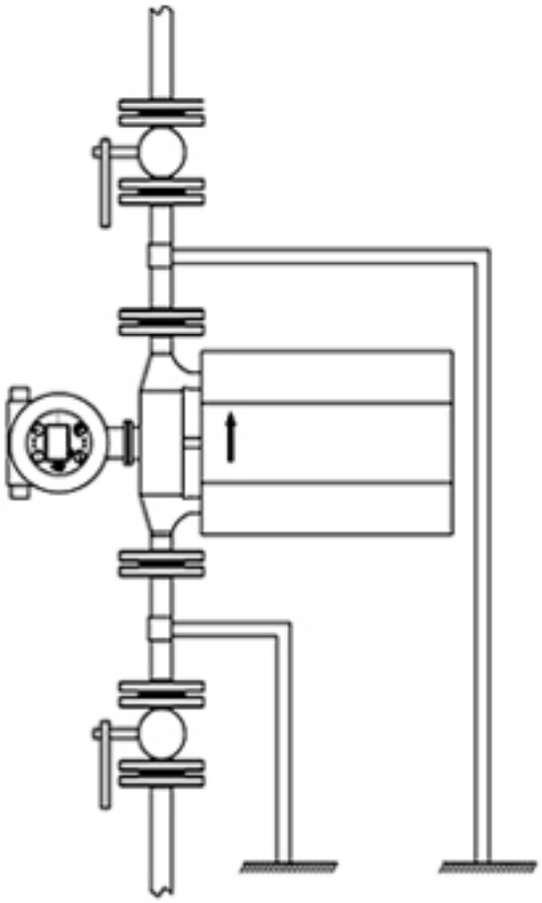

04 INSTALLATION FOR SELF-DRAINING APPLICATIONS

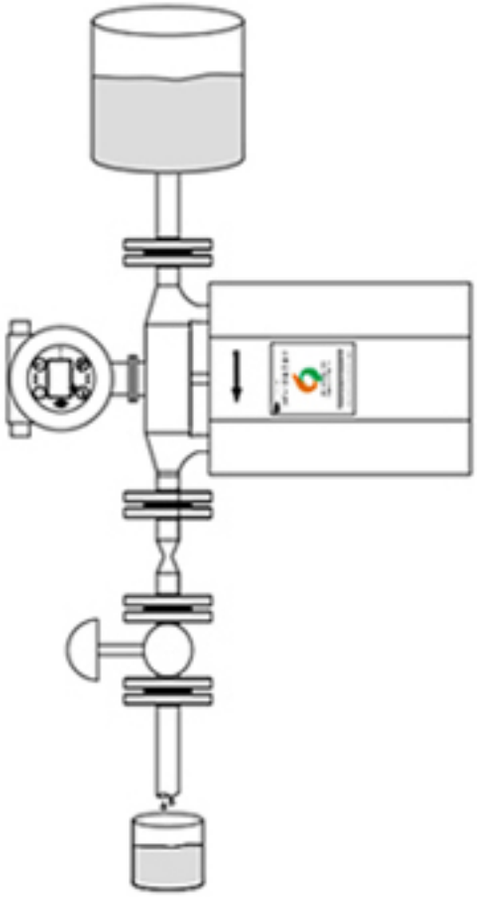

our products connect the pipe, we connect the world!

Loading & Unloading system

Vessel/Ship: Measurement of Oil consumption of mian engines &Generators.

Chemical: Measurement of liquid chlorine

SOLUTIONS









SRS INTERNATIONAL DIRECT

5% DISCOUNT FOR NEW CUSTOMERS

TAKE ON

TOUG

FIND